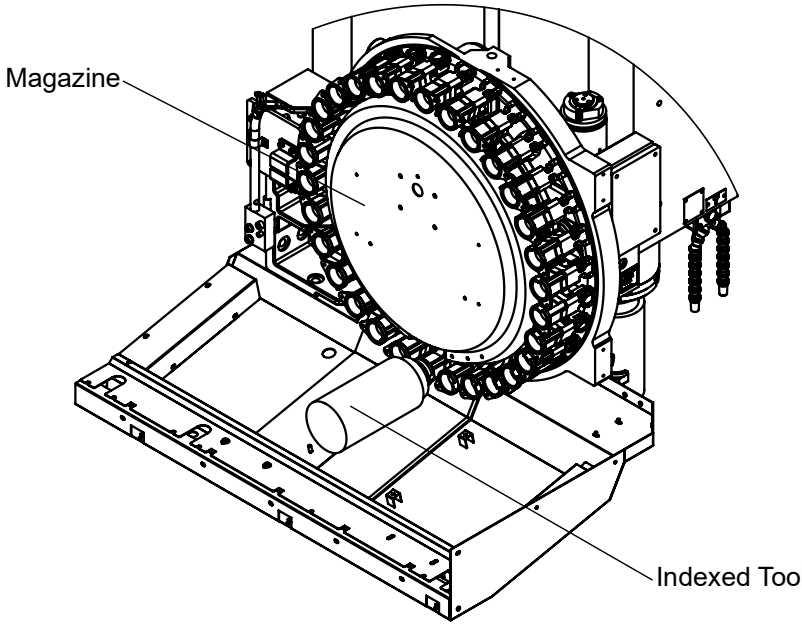

① Magazine pocket, containing the desired tool is indexed to the ‘tool change position’.

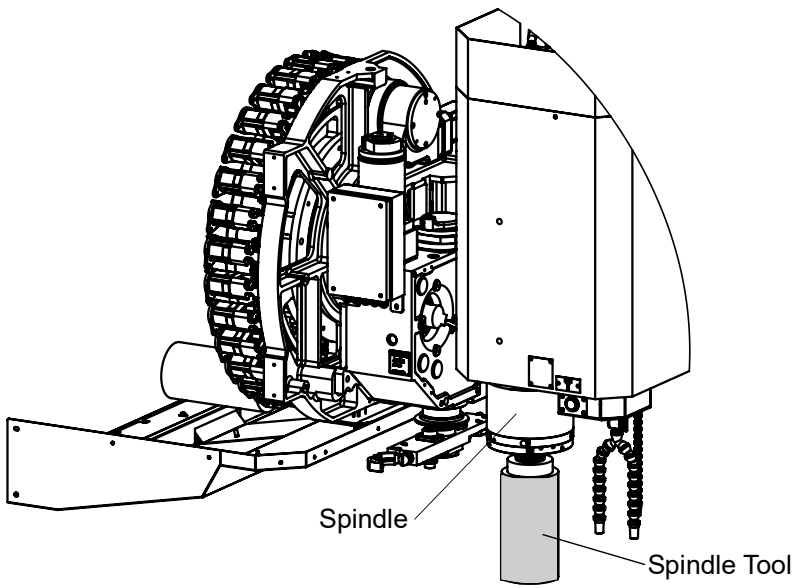

② Spindle moved to Z tool change position and oriented.